06/12/24 MS

USN | | | | | | | | | |

[23ESEC31]

THIRD SEMESTER B.Tech EXAMINATION, DECEMBER-2024

ELECTRIC CIRCUITS

Time: 3 Hours **Maximum Marks: 100**

Instructions: i. Missing data may be suitably assumed.

ANSWER ALL QUESTIONS

			Blooms Level	CO's	Marks
		PART-A			**5 x2=10**
1.	**a.**	Distinguish between active and passive elements.	L2	CO1	**02**
	b.	Explain node and mesh in electrical circuits.	L2	CO2	**02**
	c.	Define reciprocity and symmetry in two port networks.	L2	CO6	**02**
	d.	Distinguish between series and parallel resonant circuits.	L2	CO5	**02**
	e.	Discuss two port networks with examples.	L2	CO6	**02**
		PART-B			**6 X 5=30**
2.	**a.**	Explain ideal and practical voltage and current sources.	L2	CO1	**05**
		OR			
	b.	Discuss Kirchhoff's laws in electrical circuits.	L2	CO1	**05**
3.	**a.**	Describe the procedure for solving an electrical circuit using mesh current analysis.	L2	CO2	**05**
		OR			
	b.	Describe the procedure for solving an electrical circuit using node voltage analysis.	L2	CO3	**05**
4.	**a.**	Illustrate maximum power transfer theorem for dc source and resistive load.	L3	CO4	**05**
		OR			
	b.	Illustrate Thevenin's theorem.	L3	CO4	**05**
5.	**a.**	Interpret the expressions for f_1 and f_2 of a series resonant circuit.	L3	CO5	**05**
		OR			
	b.	Interpret the relation between f_r, f_1, and f_2 of a series resonant circuit.	L3	CO5	**05**

JGU (Deemed-to-be University) Learning Resource Centre Jain Global Campus Ramanagar-112

6.	**a.**	Demonstrate short-circuit admittance parameters.	L3	CO6	**05**
		OR			
	b.	Demonstrate open-circuit impedance parameters.	L3	CO6	**05**
7.	**a.**	Illustrate Millman's theorem.	L3	CO4	**05**
		OR			
	b.	Illustrate the quality factor of the series resonant circuit.	L3	CO5	**05**
		PART-C		**6 X 10=60**	
8.	**a.**	Calculate the currents through 25Ω in each branch using Kirchhoff's laws in the network shown in below Fig 8a. 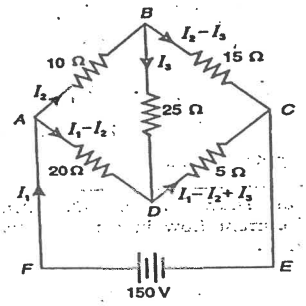 Fig 8a	L3	CO1	**10**
		OR			
	b.	Calculate the current in the 10Ω resistor in the given network shown in below Fig 8b., using star-delta transformation. 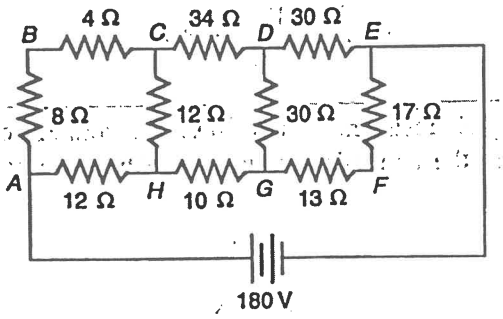 Fig 8b	L3	CO1	**10**
9.	**a.**	Examine Ix in the circuit shown below in Fig 9a using mesh analysis. 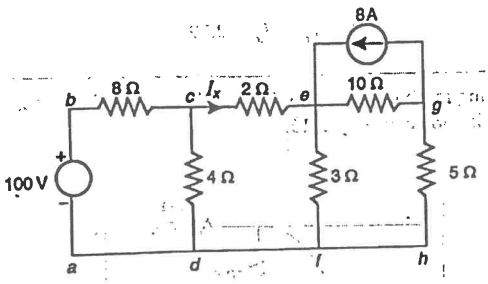 Fig 9a	L3	CO2	**10**

		OR			
	b.	Examine the currents in each branch of the network shown in below Fig 9b. using node voltage analysis. 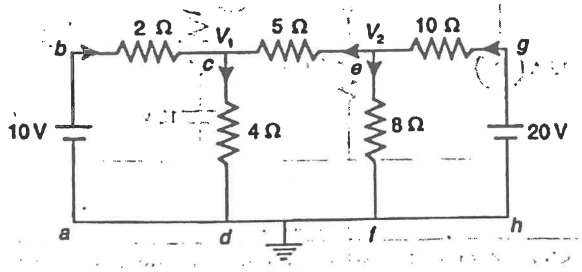 Fig 9b	L3	CO2	**10**
10.	**a.**	Calculate the current flowing through load resistance 10Ω in the circuit shown in below using superposition theorem. 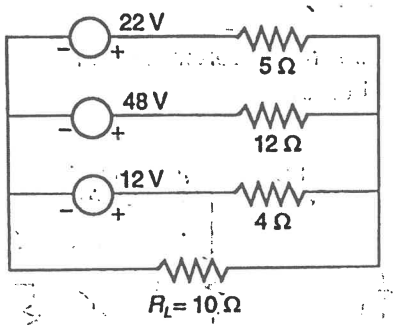 Fig 10a	L3	CO4	**10**
		OR			
	b.	Examine Nortan's equivalent circuit for the network shown in below Fig 10b. 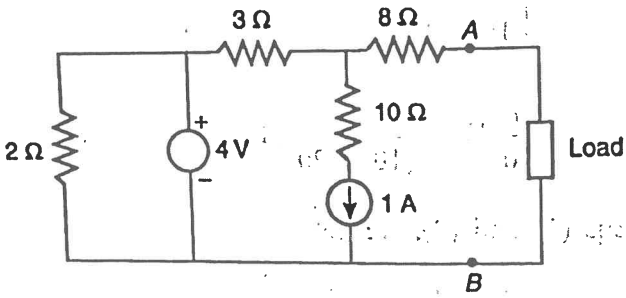 Fig 10b	L3	CO4	**10**
11.	**a.**	A series RLC circuit has R=10Ω, L=0.1H, and C=100μF and is connected across a 200V variable frequency source. Calculate **i.** The resonant frequency. **ii.** Impedance at this frequency. **iii.** The voltage drops across inductance and capacitance at this frequency.	L3	CO5	**10**

		iv. Quality factor. **v.** Bandwidth.			
		OR			
	b.	An inductive coil of resistance 6Ω and inductance 1mH is connected in parallel with another branch consisting of a resistance of 4Ω in series with a capacitance of 20μF. Calculate the resonant frequency and the corresponding current, when the applied voltage is 200V.	L3	CO5	**10**
12.	**a.**	Calculate the y and z parameters for the network given in below Fig 12a. 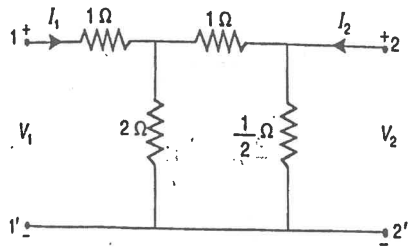 Fig 12a	L3	CO6	**10**
		OR			
	b.	The port currents of a two-port network are given by $I_1=2.5V_1-V_2$ and $I_2=-V_1+5V_2$. Calculate the equivalent π network.	L3	CO6	**10**
13.	**a.**	In the network shown in below Fig 13a, the numbers represent the value of resistance in Ω. Calculate the resistance between the points A and B. 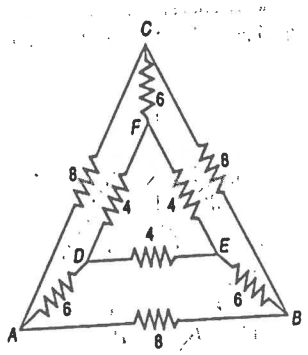 Fig 13a	L3	CO1	**10**
		OR			
	b.	Calculate the y parameters for the network shown in below Fig 13b. 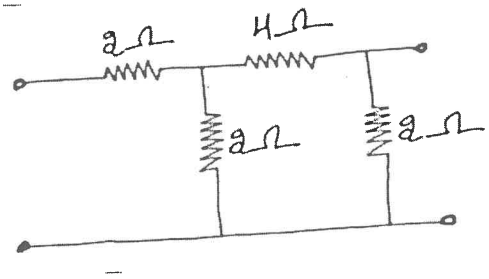 Fig 13b	L4	CO6	**10**